EXCEL™
LIGHTING SYSTEM

SOLAR

SolarPath™ sun solutions

H-GHJ-GHT eXCeL

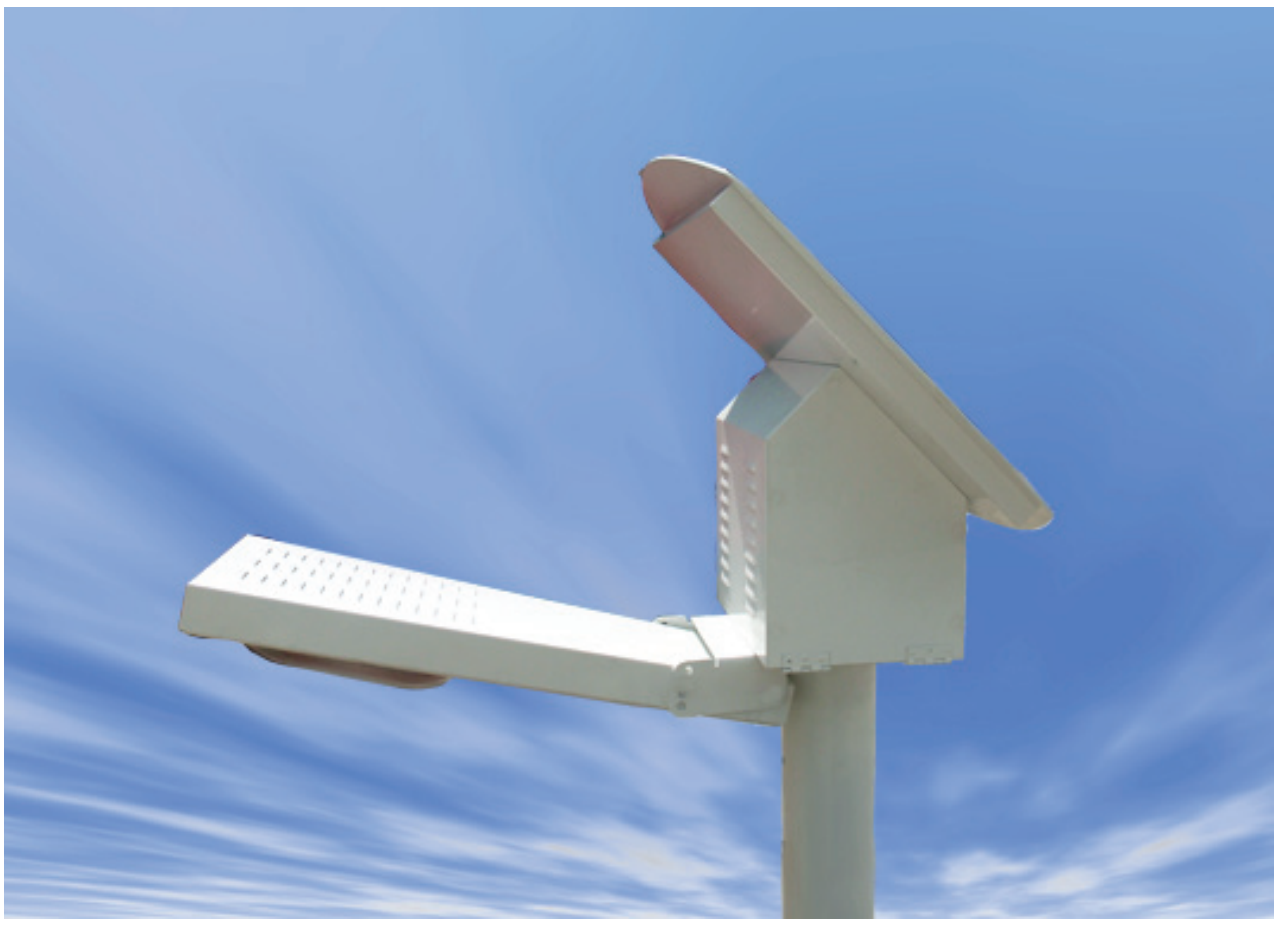

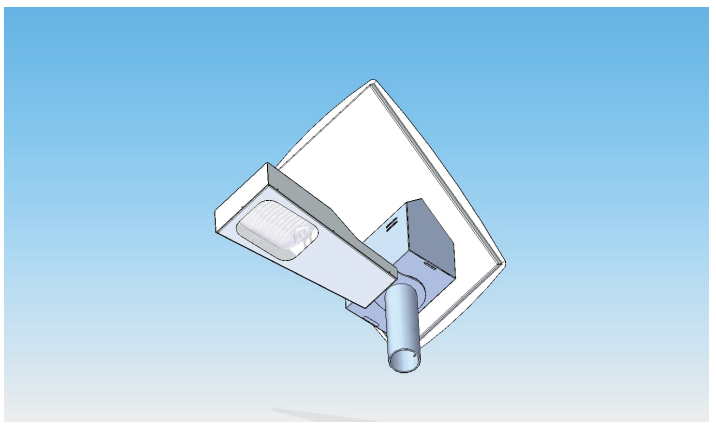

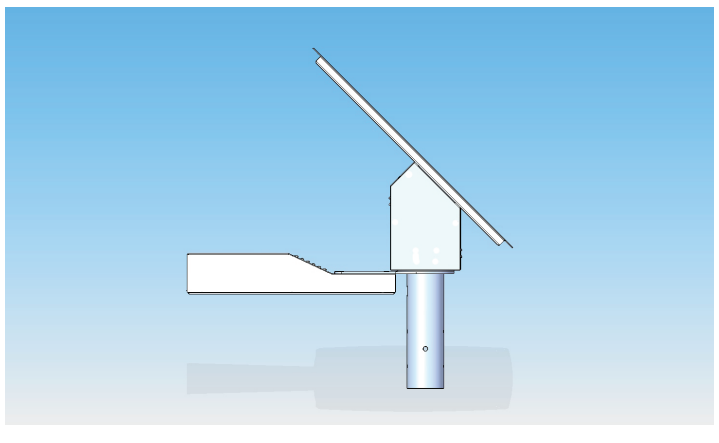

Email: info@solarpathusa.com Web: www.solarpathusa.com
Rev. 08/12-A

123 Town Square Pl. #333, Jersey City NJ 07310
Toll free (888) 333.SOLAR(7652) Tel. +1.201.490.4499 Fax (201) 839-4607

EXCEL™
LIGHTING SYSTEM

HighLight EXCEL

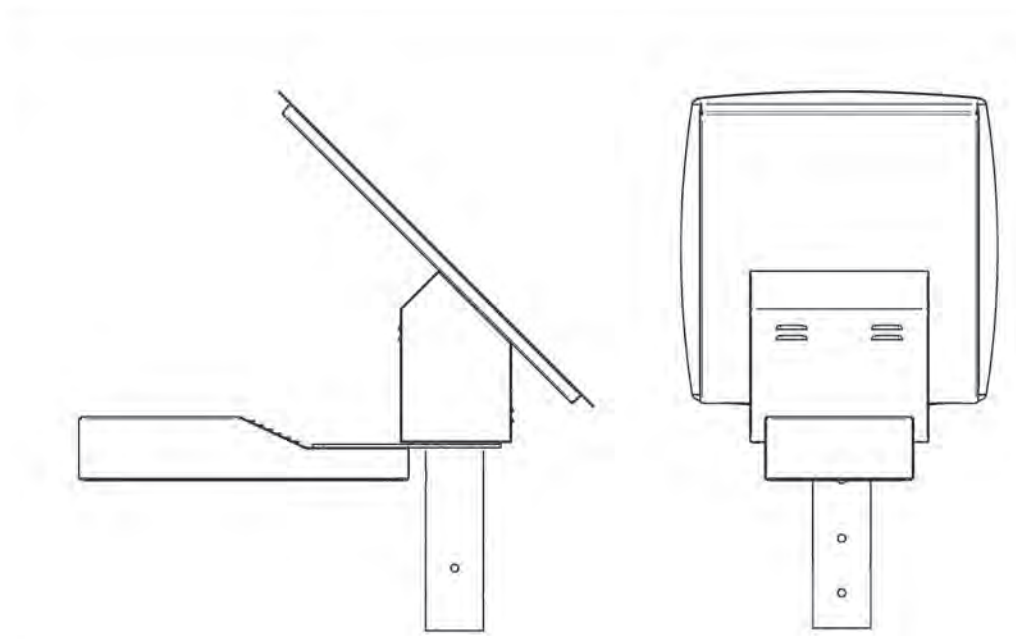

Ordering Guide

EXCL						
Series	Light intensity	LED color temp	Battery	Body color	Distrib. type	Option

Model	Light intensity	LED color temp	Battery options	Body color	Distribution	Options
EXCL	**1 - EXCEL 1000** up to 1200 lumens **2 - EXCEL 2000** up to 2400 lumens	**4K** - 4000K **55K** - 5500K **6K** - 6000K	1 - 1 x deep cycle battery 3 - 1 x deep cycle battery (extreme weather)	**9010** Pure White **1015** Ivory **7035** Light Gray **7021** Dark Gray **8019** Bronze **9005** Jet Black **Cxxxx** Custom request, replace "xxxx" with RAL color number	2 - Type II 3 - Type III 4 - Type IV 5 - TypeV	**SCP** SP Control Pack **ESS** EnerSave™ occupancy sensor **FWS** Fishing & Wildlife Shield

The SolarPath HighLight EXCEL™ Series

is the ideal LED solar illumination technology for parking lot, street, pathway, perimeter and site lighting applications. Utilizing mesh networking and occupancy sensors, high output LEDs, and ultra efficient solar panels—all while maintaining its compact design—the HighLight EXCEL™ brings solar lighting to the next level.

Key features

- Compact design for easy and safe installation
- Ultra-bright homogeneous LED light distribution
- Strong, weather-proof housing design
- Vandal resistant
- Recommended installation height up to 18ft (~6m)
- Complies with Fish & Wildlife conservation regulations

Uses and Applications Guide

Street lighting	●
Parking lots	●
Boardwalks	●
Farms	●
Public parks	●
Private gardens	●
Access roads	●
Walking paths	●
Bus stations	●

Technical Specifications

Lighting and Operation	
Lighting Technology	High Power LED
Brightness EXCEL 1000 EXCEL 2000	 up to 1,200 lumens up to 2,400 lumens
Default color temperature	5,500°K (other may be available upon request)
Available distribution types	II, III, IV, V
Standard operation features	• Automatic day/night detection • Battery deep discharge and overcharge protection • False activation prevention logic • Computerized self-learning seasons change detection • Auto-adjusting battery charge algorithm according to ambient temperature sensing
Operation time	up to 48 hours (per charge cycle, programming dependent)
Energy Collection and Storage	
Solar panel type EXCEL 1000 EXCEL 2000	 Mono Crystalline Silicon, 50W (Location Specific) Mono Crystalline Silicon, 90W (Location Specific)
Battery type	Extreme temperature Deep Cycle AGM / Gel-Cell
Voltage / Current	12VDC
Materials	
Body	Galvanized steel and Aluminum
Dimensions (main body) EXCEL 1000 EXCEL 2000	 L28.35" W 30.3" H42.13" / L 72cm W 77cm H107cm L49" W 25.6" H55" / L124.5cm W65cm H140cm
Unit Weight EXCEL 1000 EXCEL 2000	 121lbs / 55kg 143lbs / 65kg
EPA EXCEL 1000 EXCEL 2000	 7.2 9
Packed dimensions EXCEL 1000 EXCEL 2000	 L49" W 25.6" H55" / L124.5cm W65cm H140cm L57.3" W 29.5" H18.3" / L 1455mm W 750mm H465mm
Gross packed weight EXCEL 1000 EXCEL 2000	 132lbs / 60kg 165lbs / 75kg
Optional Features	
EXCEL Control™ package	Allows full control of the system, alarms and event monitoring and statistical information transmission over long range, secure wireless connection.
Integrated Motion sensor	Allows for flexible energy saving programming for location with low insolation levels and extreme weather conditions.

Email: info@solarpathusa.com Web: www.solarpathusa.com
123 Town Square Pl. #333, Jersey City NJ 07310
Toll free (888) 333.SOLAR(7652) Tel. +1.201.490.4499 Fax (201) 839-4607
Rev. 08/12-A